TECEone – 9 700 200

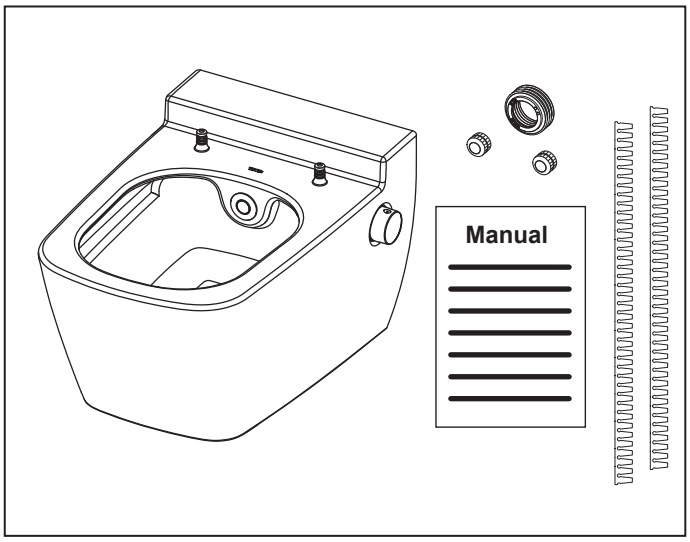

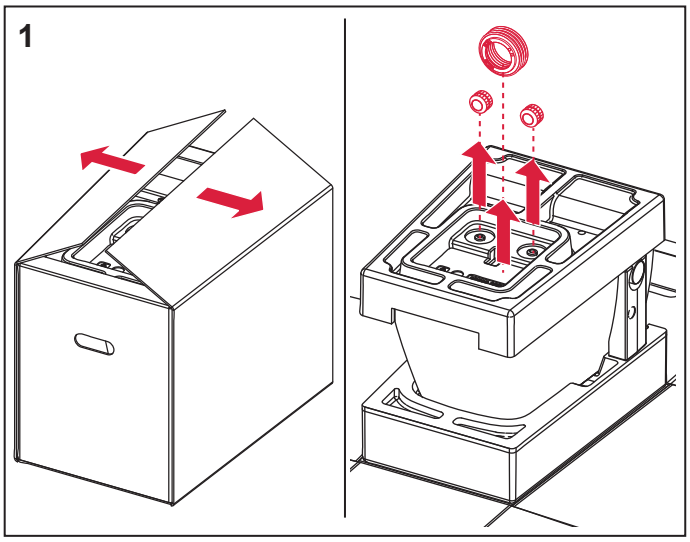

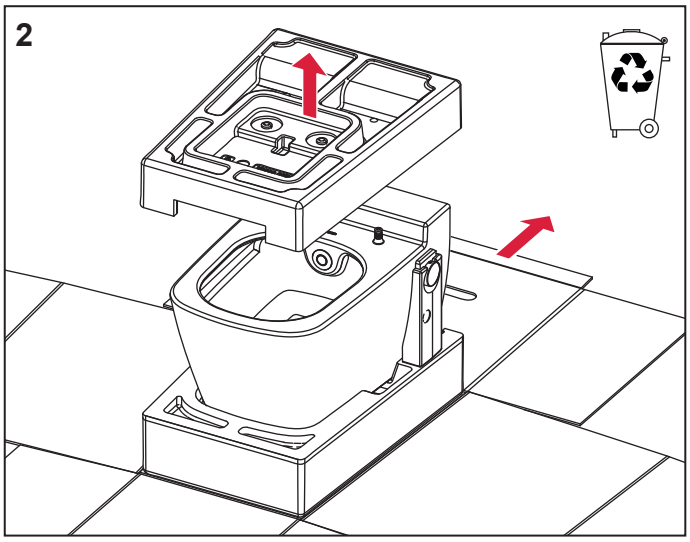

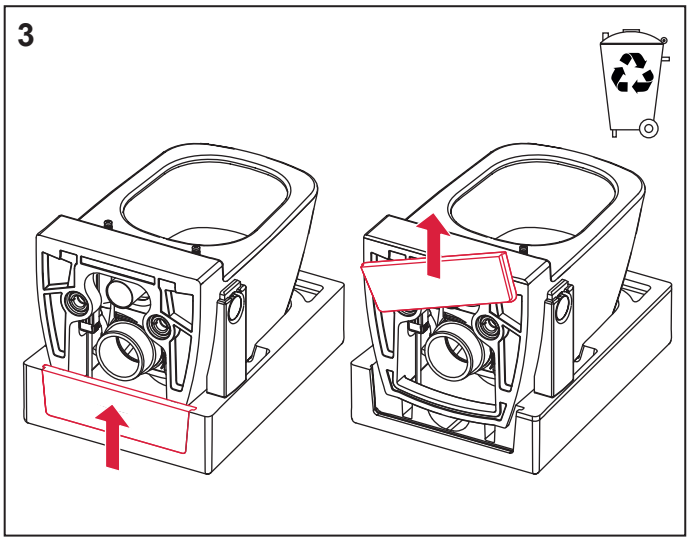

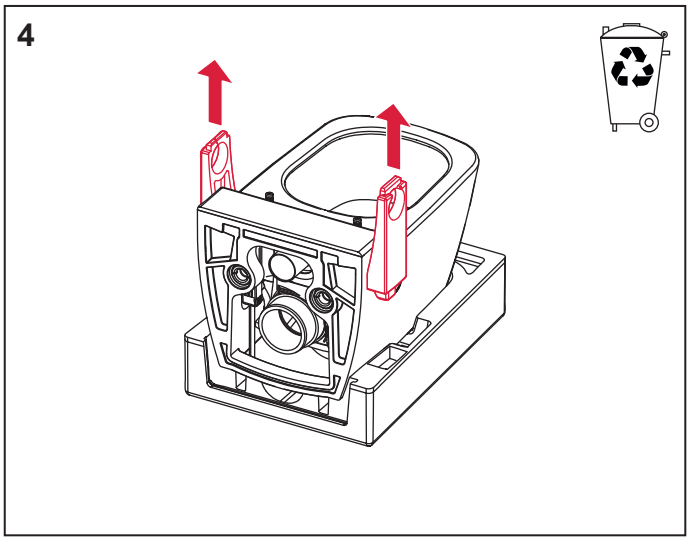

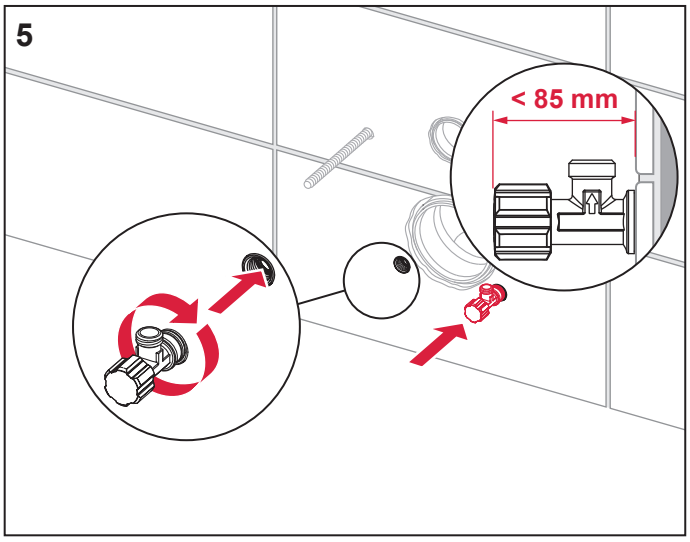

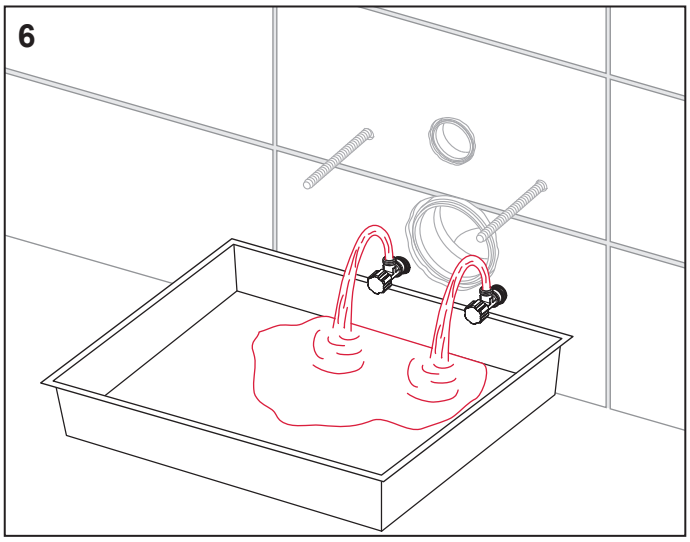
6

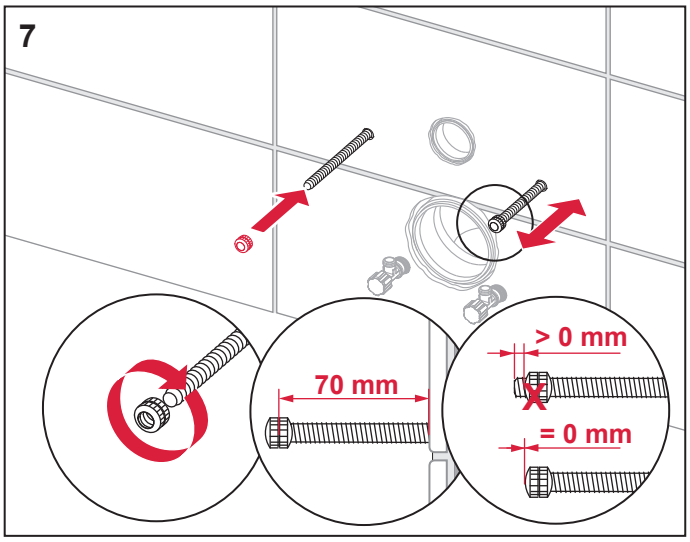
7
70 mm
> 0 mm
= 0 mm

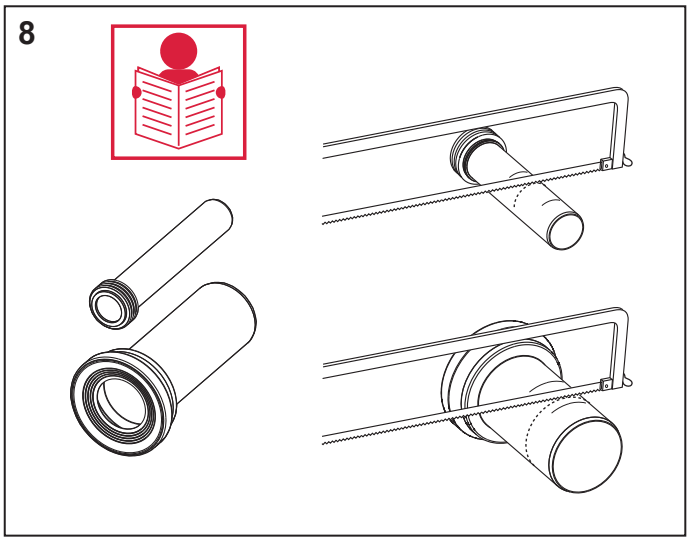
8

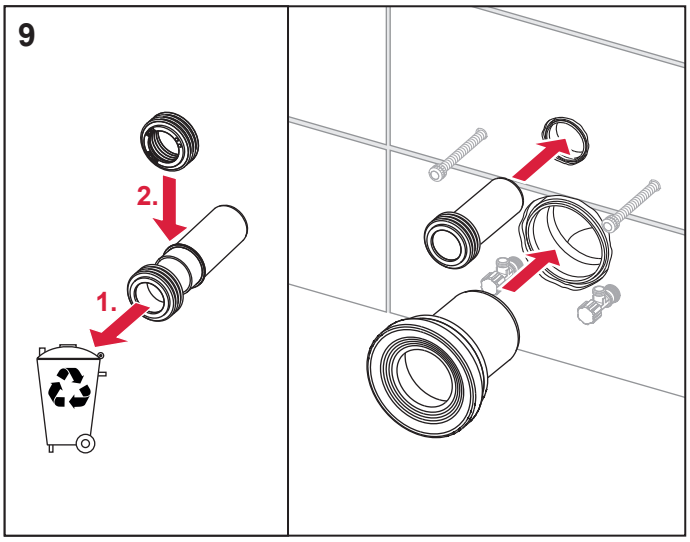
9
2.
1.

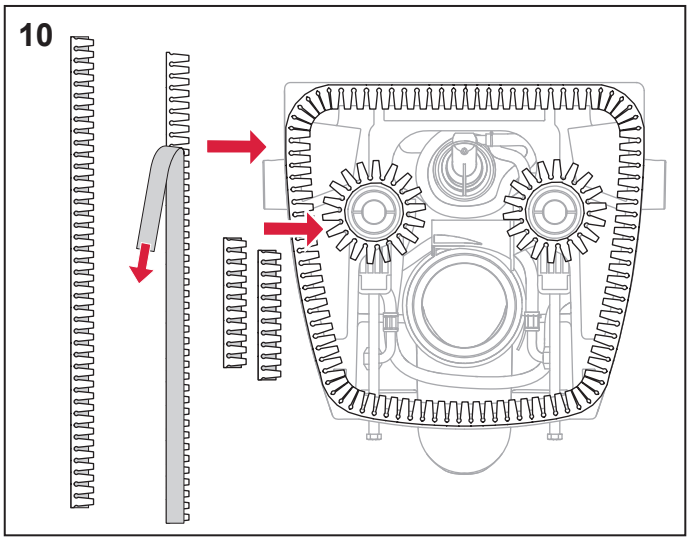
10

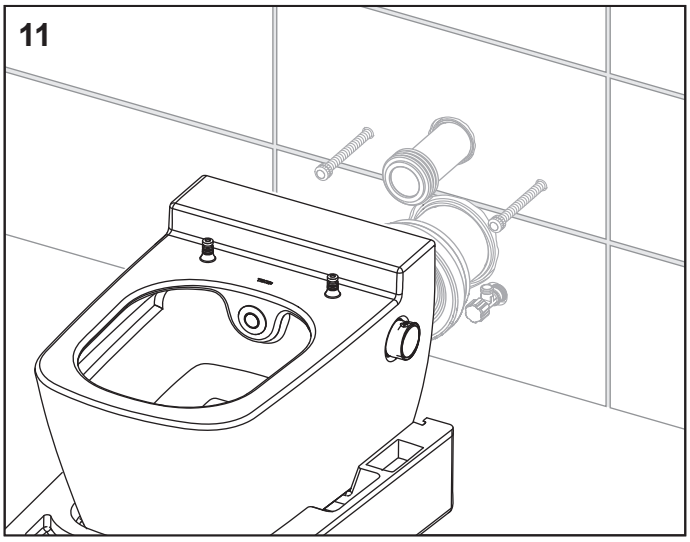
11

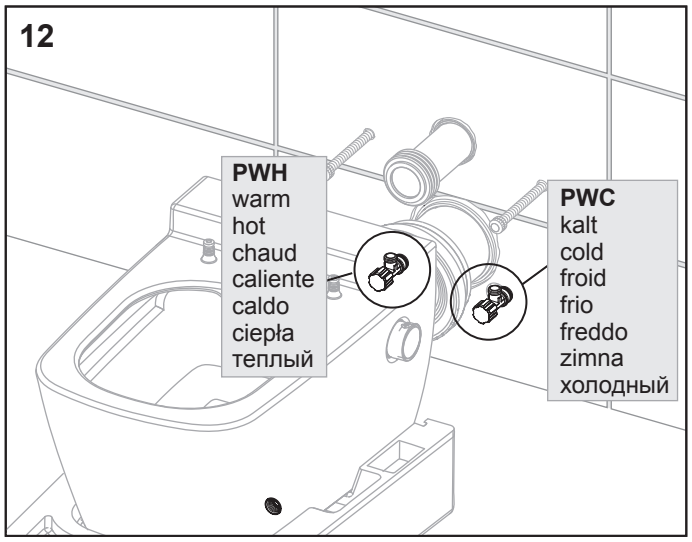
12
PWH
warm
hot
chaud
caliente
caldo
ciepła
теплый
PWC
kalt
cold
froid
frio
freddo
zimna
холодный

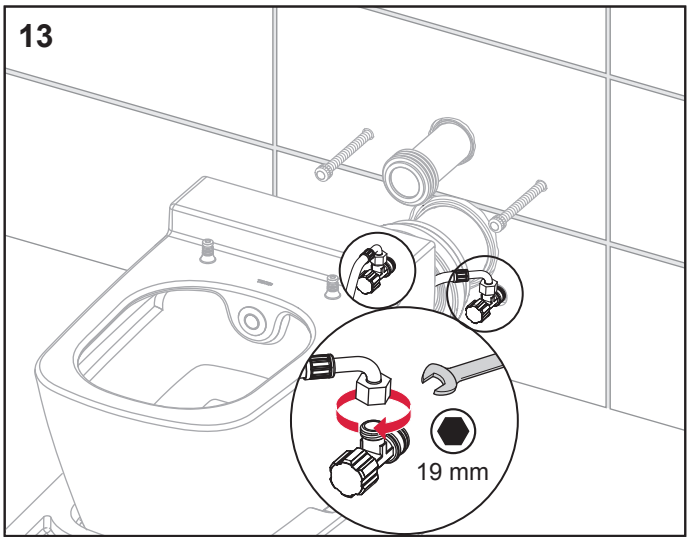
13
19 mm

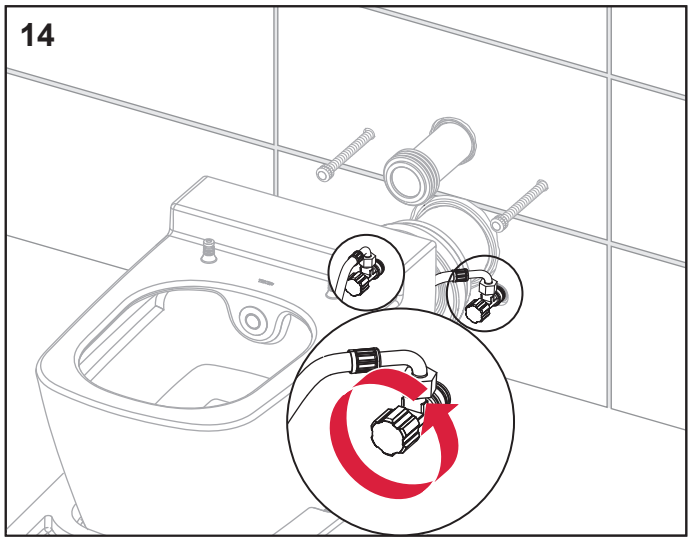
14

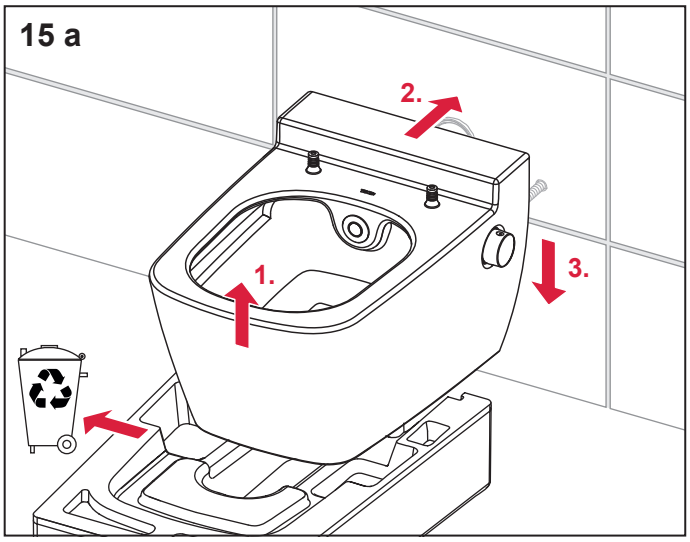
15 a
1.
2.
3.

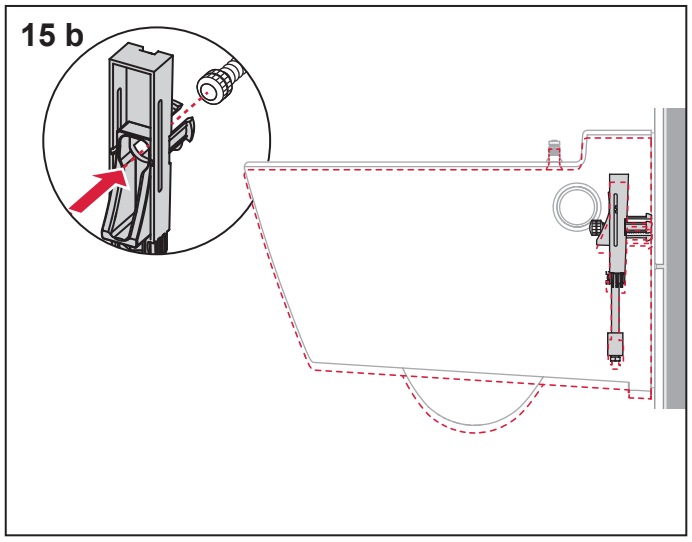
15 b

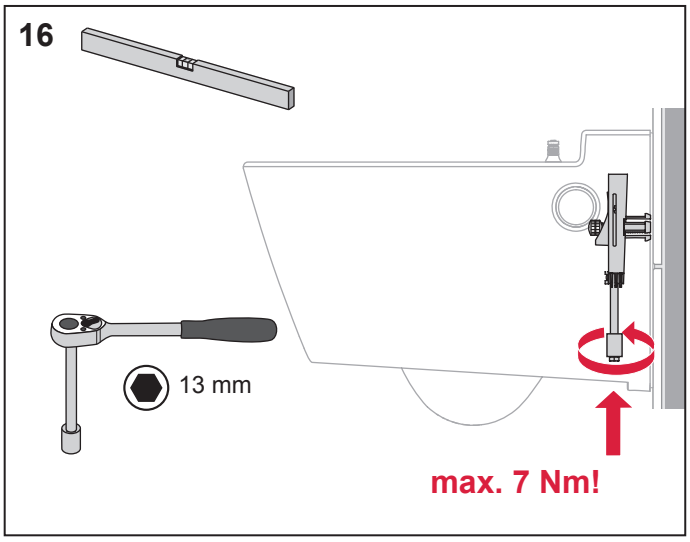
16
13 mm
max. 7 Nm!

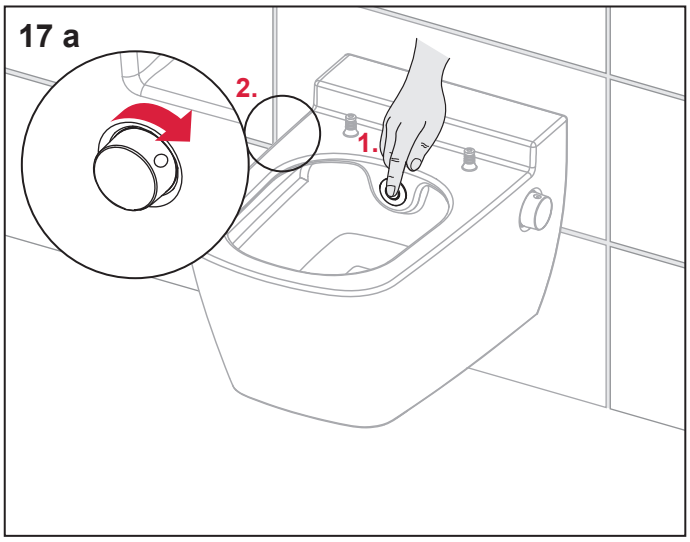

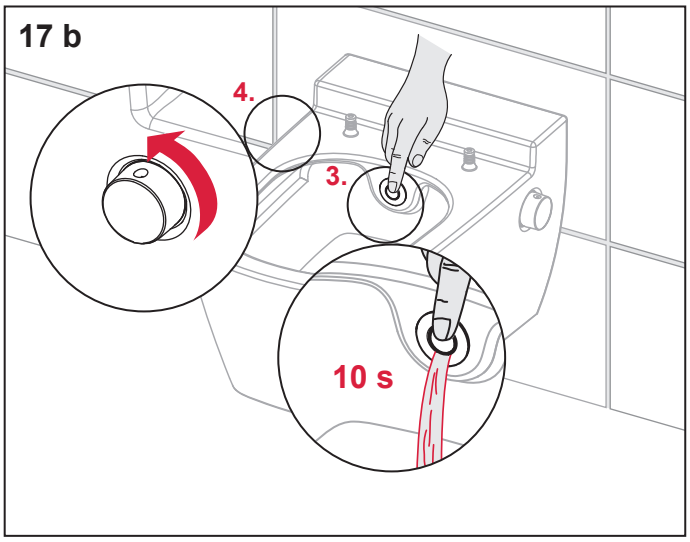

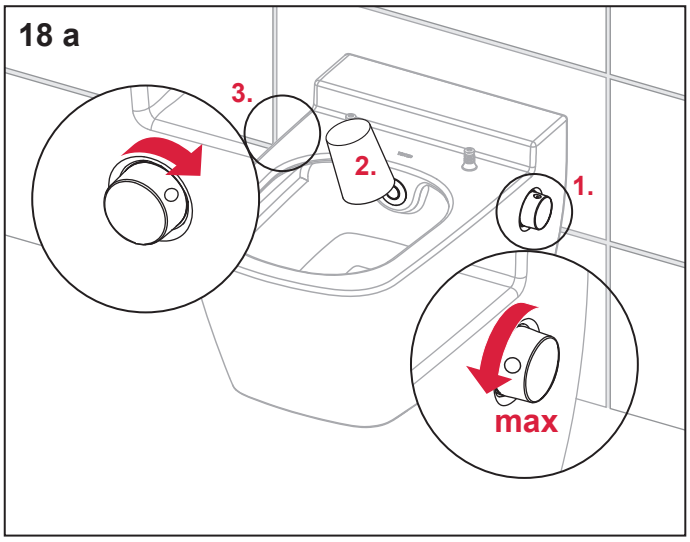

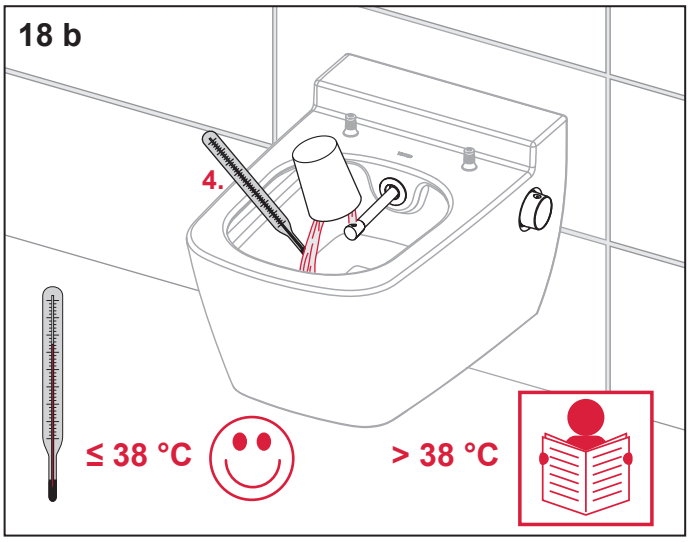

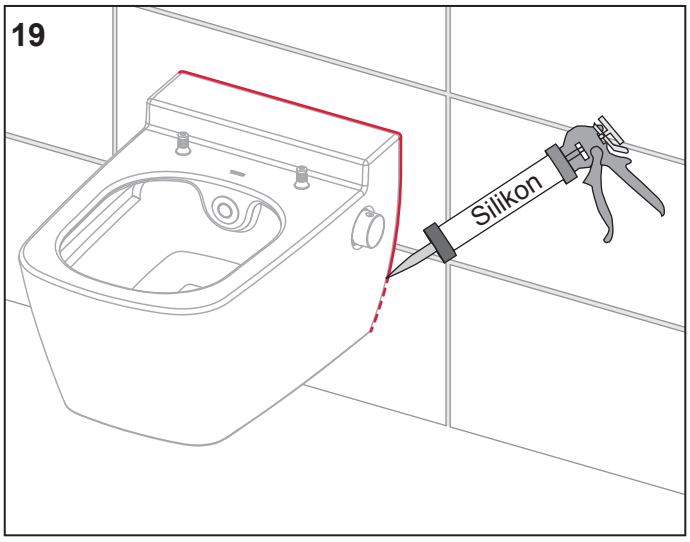

DW430 000 00 f